PANCAKE LOAD CELL
2960 / 2962 / 2965

Mounting guide

1. CONDITIONS OF UTILIZATION OF A PANCAKE LOAD CELL 2
1.1. Setting 2
1.2. Utilization 3
1.3. USE IN POTENTIALLY EXPLOSIVE ATMOSPHERE (OPTION) 3
1.3.1. Intrinsic safety protection 3
1.3.2. Specific conditions of use indicated in certificate SIRA 13ATEX2365X 4
2. PERIODIC INSPECTIONS 4
3. USE FEATURES 4
4. GUARANTEE 5
5. DRAWINGS AND WIRING DIAGRAMS 5
6. EU Declaration of Conformity 12

Rev.	Date	Reason
1	04/03/2019	Load cell design update + EU Declaration of conformity
2	18/12/2019	Labels modification (CE0 518 becomes CE 2813)
3	20/12/2021	Adding of specific conditions of use indicated in certificate SIRA 13ATEX2365X

1. CONDITIONS OF UTILIZATION OF A PANCAKE LOAD CELL

1.1. Setting

1. The reference load cell has to be used in the defined conditions of its technical data and following described conditions.
2. The 2960 / 2962 / 2965 (Pancake) load cell can work in compression and tension. It should not normally be subject to parasitic constrains such as: torsion flexion or shearing.
3. The setting of the load cell cannot be done using force or by giving violent knocks. Nevertheless, you can use a wooden mallet to insure the adjustment.
4. The load cell should be mounted on clean and flat surfaces.
5. The screws shall be fixed at the nominal torque specified in the technical file (further in this document).
6. Load fixture must contact top inner ring
7. Support fixture must contact lower outer ring only.
8. Only the length of cable delivered with the load cell can be used; although this cable can be shortened. It is the mounter's job only to connect the load cell to its electronic device according to the color codes defined on the form of the load cell and according to the specifications equivalent to the electronics used. The mounter will insure the integrity of the cable after setting on site. All injury of this cable or one of the conductors necessitates its replacement by SENSY.

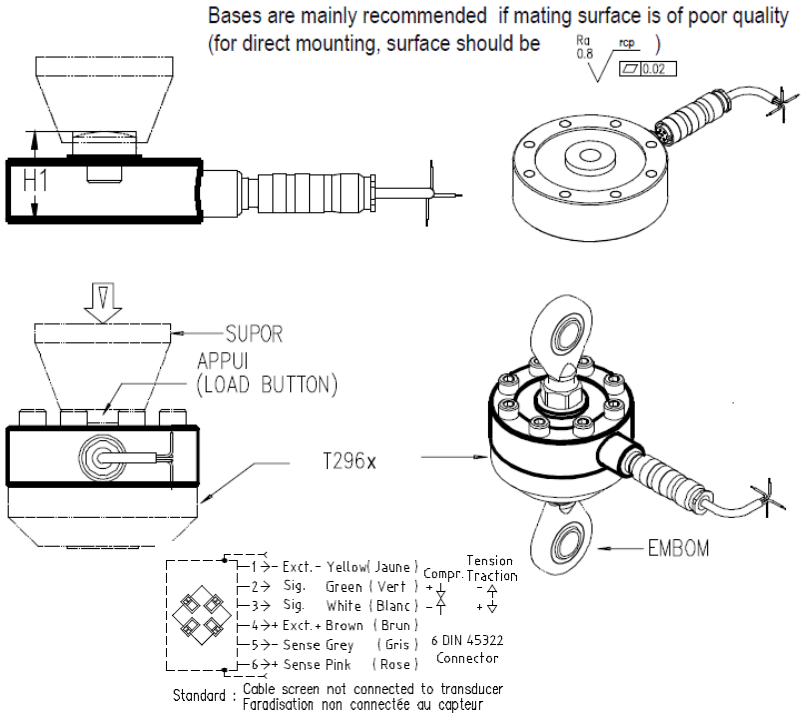

1.2. Utilization

1. The Pancake load cell is designed to support an occasional static overload, without injury, up to 1.5 x the Nominal Load (case of the test load of a travelling crane). In no case, a superior overload is (static or dynamic) acceptable.
2. Make sure that the deformation of the axle is not restrained.
3. The handled load must be free and adapted to the nominal load of the system:
   - No anchorage to the ground or support;
   - No collision with another load or structure;
   - No jamming;
   - No shock produced by the fall of another load on the handled load
4. The load cell should not undergo shocks linked to the conditions of utilisation: case of a balancing single-tree crashing against the chassis of the winch in the swing of the pulley block.

1.3. USE IN POTENTIALLY EXPLOSIVE ATMOSPHERE (OPTION)

1.3.1. Intrinsic safety protection

Use of sensors in hazardous zones can only be done with Ex marked sensors, delivered with one or more of the certificates hereunder:

ATEX:	ISSeP07ATEX012X
ATEX:	Sira13ATEX2365X
CSA:	Master Contract 259620
IECEX:	IECEx SIR 13.0148X

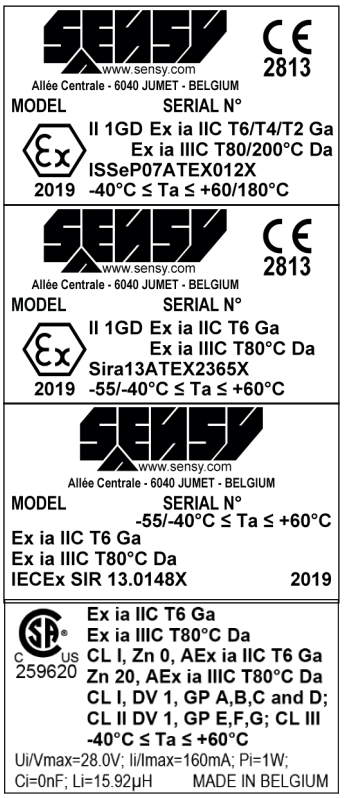

This certificate is issued by accredited organization. Sensors must be used with appropriate safety material (Zener barrier or galvanic isolator) corresponding to the requested requirements mentioned in the certificate.

SENSY's load cells which are marked Ex i comply with the following standards:

ATEX	CSA	IECEx
EN 60079-0: 2012 EN 60079-26: 2007 EN 60079-11: 2012	CAN/CSA-C22.2 No. 0-10 C22.2 No.142-M1987; CAN/CSA-C22.2 No. 60079-0:11 CAN/CSA-C22.2 No. 60079-11:14 ANSI/UL 508, 17th Edition; ANSI/UL Standard 913; ANSI/UL 60079-0:13, 6th Edition; ANSI/UL 60079-11:13, 6th Edition	IEC 60079-0: 2011 IEC 60079-11: 2011 IEC 60079-26: 2006

The use of junction boxes or additional cable lengths must be considered in the choice of protection. The electrical characteristics of the cable being limited (see certification), it is recommended to carefully chose the cable length and avoid any winding of the cable. After having defined all elements, it is mandatory to control if the sensor's output tension is still compatible with the electronic device in use and the requested accuracy.
See certificate for the special conditions for safe use.

1.3.2. Specific conditions of use indicated in certificate SIRA 13ATEX2365X

When the apparatus is used in dust atmospheres, connectors, plugs and cable glands used shall have an ingress protection of at least IP6X.
The equipment is not capable of withstanding the 500V dielectric strength requirement in accordance with clause 6.3.13 of EN 60079-11:2012. This shall be taken into account when installing the equipment.

2. PERIODIC INSPECTIONS

1. Check output for zero load (annually)

Output signal	Min acceptable	Max acceptable
mV/V / 4 wires	-0.15 mV/V	0.15 mV/V
4-20mA / 2 wires	3 mA	6 mA
4-20mA / 3 wires	3 mA	6 mA
0- 5V / 3 wires	0 V	0.8 V
0- 10V / 3 wires	0 V	0.8 V
1-5V / 3 wires	0.5 V	1.5 V
1 -10V / 3 wires	0.5 V	1.5 V
-10 / 0 / + 10V	-1.5 V	1.5 V

2. Make sure that the axle beam has not been knocked (markings) or chemically attacked (some corrosive greases). If points 1 and 2 are not accounted for, just take preventive measures. (annually)
3. In case of doubt, reply to the diagnostic questionnaire available on Web: www.sensy.com/support.
4. Verify the integrity of the cable.
5. After any serious functioning incident, repeat operations 1 to 4.

3. USE FEATURES

(The exact characteristics are systematically given in the control sheet delivered with every load cell and function of the output signal!)

Output signal:		2 wires	4-20 mA 3 wires	1-5 V 3 wires	0-10 V 3 wires	-10…0…+10 V 3 wires	RS-232 RS-485
Compensated temp. range	-10…+45°C						
Operating temperature range	-30… +70°C[1]						
Storage temperature range	-50…+85°C	-50…+85°C					
Power supply (VDC)	5…10…15[2]	9 – 30[3]	13 – 30	13 – 30		15 - 18[4]	6…12…18
Load impedance e (Ω)	NA	≤ 750	≤ 1.000	> 5k			
Nominal sig. range	0 – 1…2 mV/V	4 - 20 mA	4 - 20 mA	0.1-5 V	0.1-10 V	-10…0…+10 V	
Saturation	> 3 mV/V	> 24 mA	> 24 mA	> 11 V			

[1] Max +60°C for EX-I T4, T6 and C6 options
[2] 5 to 12VDC for EX-I T2 GD, EX-I T4 GD and EX-I T6 GD options
[3] 9-28VDC for EX-I C6 options
[4] 15 to 27VDC with a 1000 Ω bridge

4. GUARANTEE

The manufacturer's guarantee is applicable as far as mounting recommendations and general use principle, like above described, are respected.

For any particular use, not described in this document, it is mandatory to obtain a prior written agreement from SENSY S.A. for the validity of the guarantee.

5. DRAWINGS AND WIRING DIAGRAMS

www.sensy.com

LOW-PROFILE (PANCAKE) LOAD CELLS

Universal tension and compression load cells for industrial force measurement.

Model 2960 - 300 kN

Features

o Flat design
o High stiffness and fatigue resistant
o Highly resistant to transverse forces
o Protection class: IP66
o Complete range of mounting accessories available
o Material: stainless steel (2960)**, anodised aluminium alloy (2962), alloy steel (2965)
o Cable length: see drawing table - CL (other lengths available on request)

Most popular options

Dual Wheatstone bridge | SIL / PL ready | Amplified output | Digital output | USB | Wireless | -50°C...+180°C

Application(s)

SENSY's load cells 2960-2962-2965 are perfectly designed for the following applications:

- Force measurement on machines, industrial process control, hydraulic cylinders monitoring, fatigue tests,
- Hydraulic cylinders monitoring.

Capacities

2962: (3) - 5 - 7.5 kN
2960 - 2965: 10 - (15) - 20 - (30) - 50 - (75) - 100 - 150 - 200 - 300 - 500 - (750) - 1.000 - (1500) - 2.000 - 3.000 kN

Specifications	0.25 %	0.1 %	0.03 %	
Accuracy class	0.25 % F.S.*	0.1% F.S.*	0.03% F.S.*	-
Combined error (non-linearity + hysteresis)	<± 0.25	< ± 0.1	<± 0.03	% F.S.*
Repeatability error	<± 0.1	<± 0.03	<± 0.015	% F.S.*
Creep error over 30 min.	<± 0.1	<± 0.06	<± 0.025	% F.S.*
Reference temperature	23	23	23	°C
Compensated temperature range	-10...+45	-10...+45	-10...+45	°C
Service temperature range	-25...+70	-25...+70	-25...+70	°C
Storage temperature range	-50...+85	-50...+85	-50...+85	°C
Temperature coefficient of the sensitivity	<± 0.05	<± 0.05	<± 0.015	% F.S.*/10°C
Temperature coefficient of zero signal	<± 0.035	<± 0.035	<± 0.023	% F.S.*/10°C
Nominal sensitivity	2	2	2	mV/V
Sensitivity tolerance	<± 0.3	<± 0.3	<± 0.2	%
Input resistance	700 ± 2	700 ± 2	700 ± 2	ohm(s)
Output resistance	700 ± 2	700 ± 2	700 ± 2	ohm(s)
Insulation resistance (50 V)	> 5000	> 5000	> 5000	Mohm(s)
Reference excitation voltage	10	10	10	VDC
Permissible nominal range of excitation voltage	3...12	3...12	3...12	VDC
Safe load limit	150	150	150	% F.S.*
Breaking load	>300	>300	>300	% F.S.*
Permissible dynamic loading	70	70	70	% F.S.*
Static lateral force limit	50	50	50	% F.S.*

* F.S. : Full Scale.
** CSA and IECEx options are available only for stainless steel (2960) version.
Note: 0.03% only for anodised aluminium alloy (2962) version.
Specifications subject to change without notice.

RoHS Compliant | sira | ISO 9001 certified

2960-2962-2965 > STANDARD DIMENSIONS

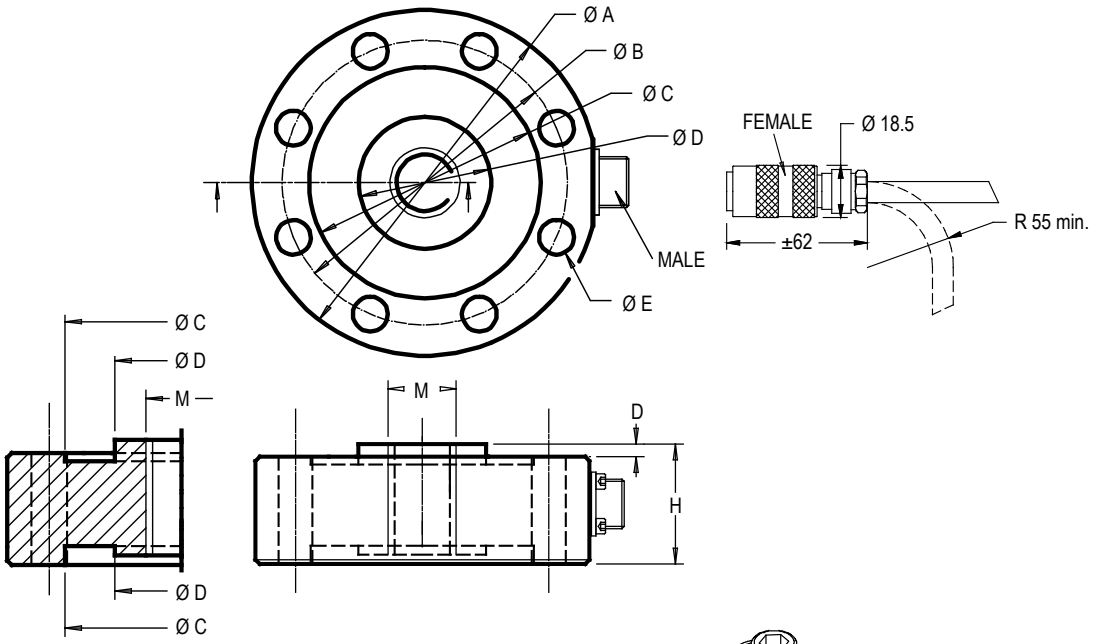

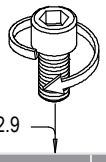

Fastener quality: 10.9 or 12.9

Ref. Item*	Capacities	Ø A	Ø B	Ø C	Ø D	Ø E	M	H	D	CL	H1	Max. Deflexion	Torque (N	Weight (kg)	ACCESSORIES		
															APPUI	SUPOR	EMBOM
2962-A	3 - 7.5 kN	89	72	59	33	8xØ8.2	M16	28	2	3	40	0.05	15 (M8)	0.3	APPUI-16B	SUPOR-36	EMBOM-M16-BA
296x-B	10 - 50 kN	89	72	59	33	8xØ8.2	M20x1.5	28	2	3	40	0.04	40 (M8)	0.9	APPUI-20	SUPOR-36	EMBOM-M20x1.5-BA
296x-C	75 - 100 kN	149	125	106	46	8xØ12.5	M30x2	38.5	2	6	53.5	0.05	130 (M12)	3.5	APPUI-30	SUPOR-45	EMBOM-M30x2-BA
296x-D	150 - 200 kN	178	145	115	69	8xØ16.5	M36x3	50	2	6	70	0.06	320 (M16)	7	APPUI-36B	SUPOR-69	EMBOM-M36x3-BA**
296x-E	300 - 500 kN	198	172	140	90	16xØ16.5	M60x4	65	3	12	92	0.07	320 (M16)	12	APPUI-60	SUPOR-90	EMBOM-M60x4-PTFE**
296x-F	0.75 - 1 MN	279	229	180	120	16xØ24.5	M64x4***	70	3	12	103	0.08	1000 (M24)	28	APPUI-64	SUPOR-90	EMBOM-M64x4-PTFE**
296x-G	1.5 - 2 MN	345	290	240	156	16xØ32	M110x4	115	15	12	/	0.10	1300 (M30)	50	According to customer's design specifications		/
296x-H	3 MN	390	335	280	195	24xØ24.5	M125x4	130	7	12	/	0.15	1000 (M24)	86			/

*x=Material: 2960 - stainless steel; 2965 - alloy steel

**See EMBOM data sheet (ACCESSORIES section)

***M90x4 available on request

→ Other capacities and dimensions available on request

Dimensions in mm

Accessories

Bases are mainly recommended if mating surface is of poor quality

(for direct mounting, surface should be Ra 0.8 rcp ▱ 0.02)

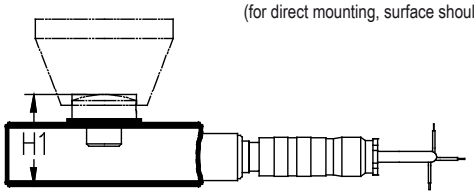

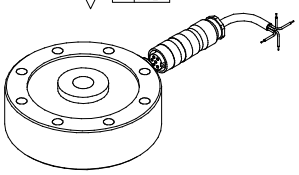

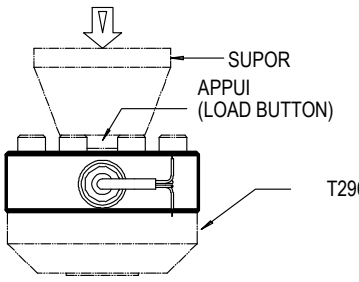

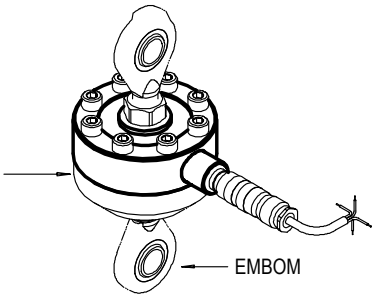

Wiring

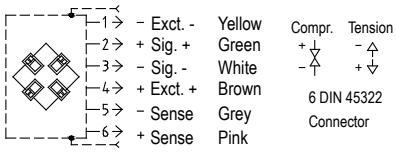

Standard: Cable screen not connected to the transducer

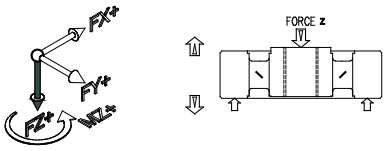

T2960-T2962-T2965 > STANDARD DIMENSIONS

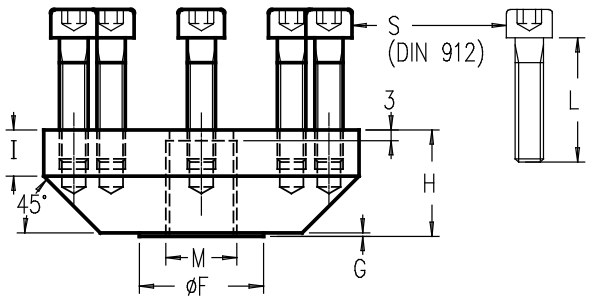

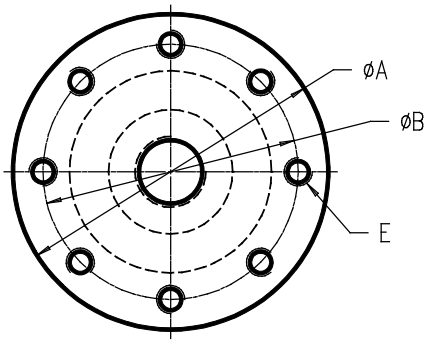

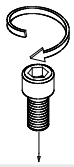

Ref. Item**	Capacities	Ø A	Ø B	E	Ø F	G	I	S	M	H	H1	H2	H3	H4	Torque (N·m)	Weight (kg)
T2962-A	3 - 7.5 kN	89	72	8xM8	25	1	13	8xM8 L=35	M16	30	70	105	58	143	15 (M8)	0.57
T296x-B	10 - 50 kN	89	72	8xM8	35	1	13	8xM8 L=35	M20x1.5	30	70	109	58	160	40 (M8)	1.19
T296x-C	75 - 100 kN	149	125	8xM12	52	1	20	8xM12 L=50	M30x2	46	99.5	140.5	84.5	225	130 (M12)	5.25
T296x-D	150 - 200 kN	178	145	8xM16	70	1	23	8xM16 L=70	M36x3	50	120	160	100	285	320 (M16)	8.7
T296x-E	300 - 500 kN	198	172	16xM16	115	1	35	16xM16 L=80	M60x4	65	157	219	130	455	320 (M16)	14.5
T296x-F	0.75 - 1 MN	279	229	16xM24	162	1	36	16xM24 L=100	M64x4	75	172	247	145	550	1000 (M24)*	35.5
T296x-G	1.5 - 2 MN	According to customer's design specifications														
T296x-H	3 MN	According to customer's design specifications														
*Fastener quality 10.9 or 12.9																
** x=Material: T2960 - stainless steel; T2965 - alloy steel																

→ Other capacities and dimensions available on request

Dimensions in mm

Other views

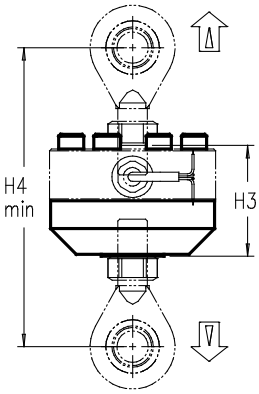

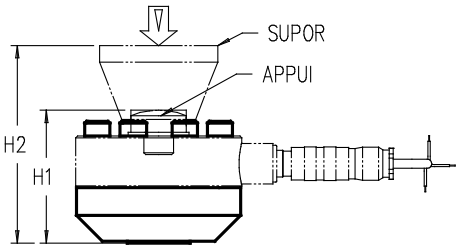

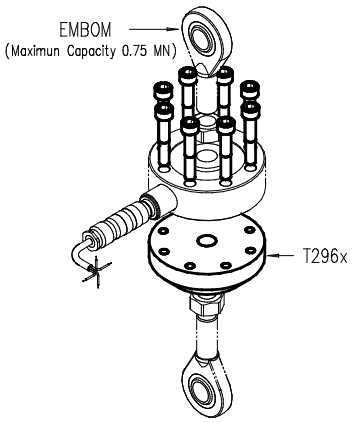

APPUI > STANDARD DIMENSIONS

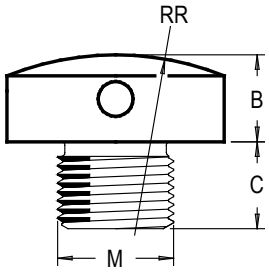

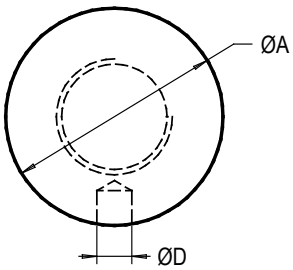

Ref. Item*	M	ØA	B	C	ØD	RR	Weight kg)
APPUI-6	M 6	12	7	8	3 (1x)	16	0.02
APPUI-8	M 8	20	7	8	3 (1x)	25	0.02
APPUI-10	M 10	20	7	10	3 (1x)	25	0.02
APPUI-12	M 12	20	10	10	3 (1x)	35	0.03
APPUI-16	M 16	30	12	12	4 (1x)	50	0.08
APPUI-16B	M 16	36	12	12	5 (1x)	100	0.11
APPUI-20x1.5	M 20 x 1.5	36	12	15	5 (1x)	70	0.12
APPUI-24x2	M 24 x 2	36	12	18	5 (1x)	60	0.15
APPUI-30x2	M 30 x 2	45	15	20	6 (2x)	100	0.28
APPUI-36x3	M 36 x 3	56	20	24	6 (2x)	150	0.55
APPUI-36Bx3	M 36 x 3	69	20	35	6 (2x)	250	0.84
APPUI-45x3	M 45 x 3	64	20	30	6 (2x)	200	0.84
APPUI-56x4	M 56 x 4	90	24	35	8 (2x)	300	1.8
APPUI-60x4	M 60 x 4	90	27	40	10 (2x)	350	2.14
APPUI-64x4	M 64 x 4	90	27	40	10 (2x)	350	2.27
			33	50	12 (2x)	450	5.46

* Material: stainless steel

Dimensions in mm

Other views

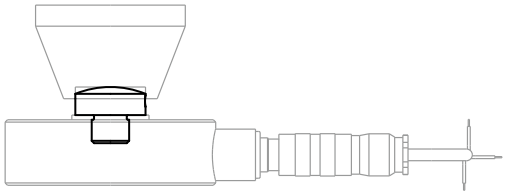

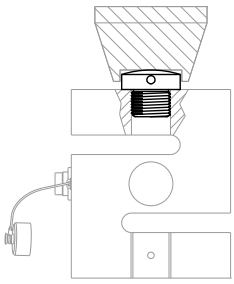

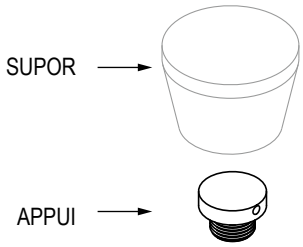

EMBOM > STANDARD DIMENSIONS

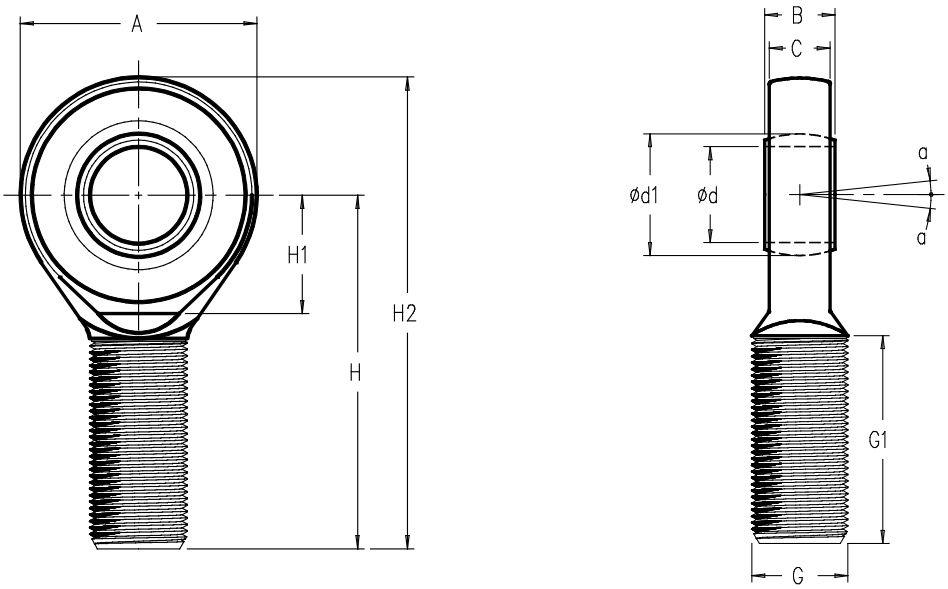

Ref. Item*	Dimension G	Capacities (N)		Ød	A	B	C	H	a (degree)	Ød1	G1	H1	H2	Weight (kg)
		Dynamic	Static											
EMBOM-M6-BA	M6	3600	9000	6	21	6	4.3	36	13	10	16	14	46.5	0.013
EMBOM-M8-BA	M8	5850	14600	8	24	8	6	42	15	13	21	14	54	0.025
EMBOM-M10-BA	M10	8560	21600	10	29	9	7	48	12	16	26	17	62.5	0.043
EMBOM-M12-BA	M12	11400	28500	12	34	10	8	54	10	18	28	18	71	0.065
EMBOM-M16-BA	M16	22400	52000	17	46	14	11	69	10	25	36	23	92	0.17
EMBOM-M20x1.5-BA	M20x1.5	31500	70000	20	53	16	13	78	9	29	43	25	104.5	0.28
EMBOM-M24x2-BA	M24x2	51000	102000	25	64	20	17	94	7	35.5	53	32	126	0.5
EMBOM-M30x2-BA	M30x2	65500	134000	30	73	22	19	110	6	40.7	65	33	146.5	0.83
EMBOM-M36x3-PTFE	M36x3	112000	143000	35	82	25	21	140	6	47	82	42	181	1.4
EMBOM-M45x3-PTFE	M45x3	220000	280000	50	112	35	30	185	6	66	104	60	241	3.55
EMBOM-M56x4-PTFE	M56x4	440000	630000	70	160	49	42	235	6	92	125	87	315	7.9
EMBOM-M60x4-PTFE	M60x4	345000	440000	60	135	44	38	225	6	80	120	70	292.5	6.25
EMBOM-M64x4-PTFE	M64x4	570000	780000	80	180	55	47	270	6	105	140	100	360	12

* Material: BA - bronze-auto lubricated ; PTFE - polytetrafluoroethylene

→ Other capacities and dimensions available on request

Dimensions in mm

Other view

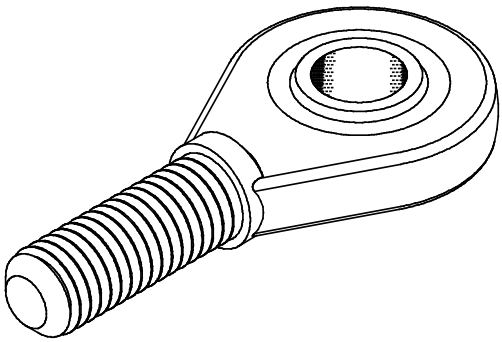

SUPOR > STANDARD DIMENSIONS

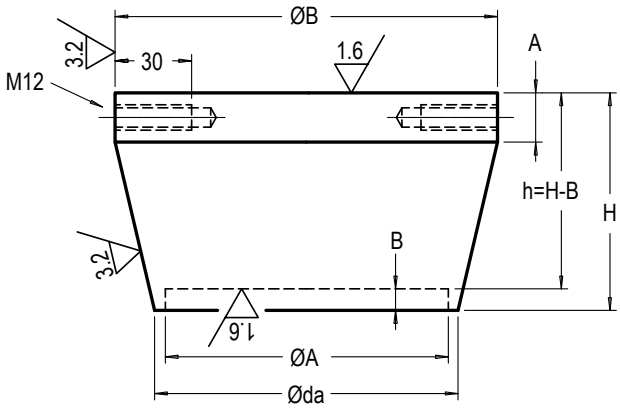

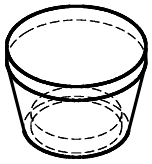

Ref. Item	Types	ØA	ØB	Øda	A	B	H	h	M 12 L=30 (degree)	Weight (kg)
SUPOR-12	12	12	34	20	7	4	23	19	NO	0.12
SUPOR-20	20	20	49	30	8	5	31	26	NO	0.33
SUPOR-24	24	24	59	35	9	6	36	30	NO	0.55
SUPOR-30	30	30	64	40	9	6	41	35	NO	0.74
SUPOR-36	36	36	69	46	10	7	46	39	NO	0.98
SUPOR-45	45	45	79	56	11	12	53	41	NO	1.5
SUPOR-56	56	56	79	66	12	8	48	40	NO	1.5
SUPOR-64	64	64	99	75	12	17	64	47	NO	2.8
SUPOR-64E	64E	64	114	75	12	17	75	58	NO	4.14
SUPOR-69	69	69	79	75	12	12	52	40	NO	1.6
SUPOR-90	90	90	129	100	15	17	79	62	NO	6
SUPOR-90B	90B	90	164	100	15	17	109	92	NO	12.2
SUPOR-110	110	110	195	135	20	19	109	90	2x to 180	18.7
SUPOR-125A	125A	125	158	135	20	19	94	75	2x to 180	11.3
SUPOR-125B	125B	125	195	135	20	19	109	90	2x to 180	18.3
SUPOR-160	160	160	248	±170	30	20	146	126	2x to 180	40
SUPOR-200A	200A	200	308	±210	30	20	175	155	2x to 180	73
SUPOR-200B	200B	200	353	±210	30	20	200	180	4x to 90	103
SUPOR-230	230	230	353	±270	50	35	211.5	176.5	4x to 90	125
SUPOR-250A	250A	250	438	±290	40	30	250	220	6x to 60	209
SUPOR-250B	250B	250	503	±290	40	30	285	255	6x to 60	294
SUPOR-300A	300A	300	594	±340	50	40	337	297	6x to 60	481
SUPOR-330A	330A	330	503	±370	50	50	301.5	251.5	6x to 60	341
SUPOR-360A	360A	360	694	±401	100	50	397	347	6x M24 / 360	818
SUPOR-400A	400A	400	594	±440	50	55	352	297	6x to 60	555
SUPOR-430A	430A	430	795	±470	±100	50	448	398	6x M30 / 360	1209

→ Other capacities and dimensions available on request

Dimensions in mm

Other views

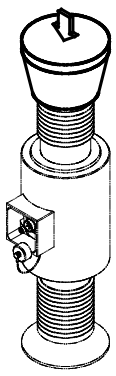

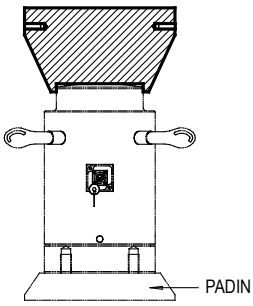

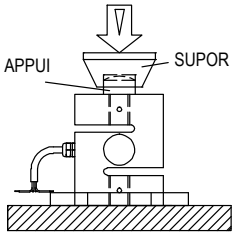

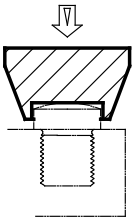

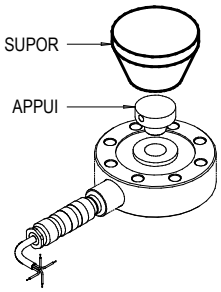

6. EU DECLARATION OF CONFORMITY

Manufactured by:

SENSY SA
Z.I. Jumet – Allée Centrale
B – 6040 JUMET
Phone: +32 71 25.82.00
Fax: +32 71 37.09.11
Website: http://www.sensy.com

CONCERNED ITEMS: 2960/2962/2965, see calibration certificate related to model and serial number.

SENSY S.A. certify that the items described here above have been duly designed, manufactured and tested for use in accordance with the essential requirements defined in the European Directives listed here under.

2014/30/EU	Electro-Magnetic Compatibility Directive
2011/65/EU amended by directive 2017/2102/EU	Restriction of the use of certain hazardous substances in the electrical and electronic equipment (RoHS)
2014/35/EU	Safety / low voltage directive

Conception and compliance of this equipment is made according to all of part of the following standards:
EN 61326 (2006)

If designed, manufactured and tested safety ref. D-DP SIL3 READY (option):
see specific and separate certificate according to ISO 13849-1 and/or EN 62061

If designed, manufactured and tested for use in potentially explosive atmospheres (option):
see specific and separate certificate.

Jumet,
March 18th 2019

Augustin DUBOIS
Product Development Division